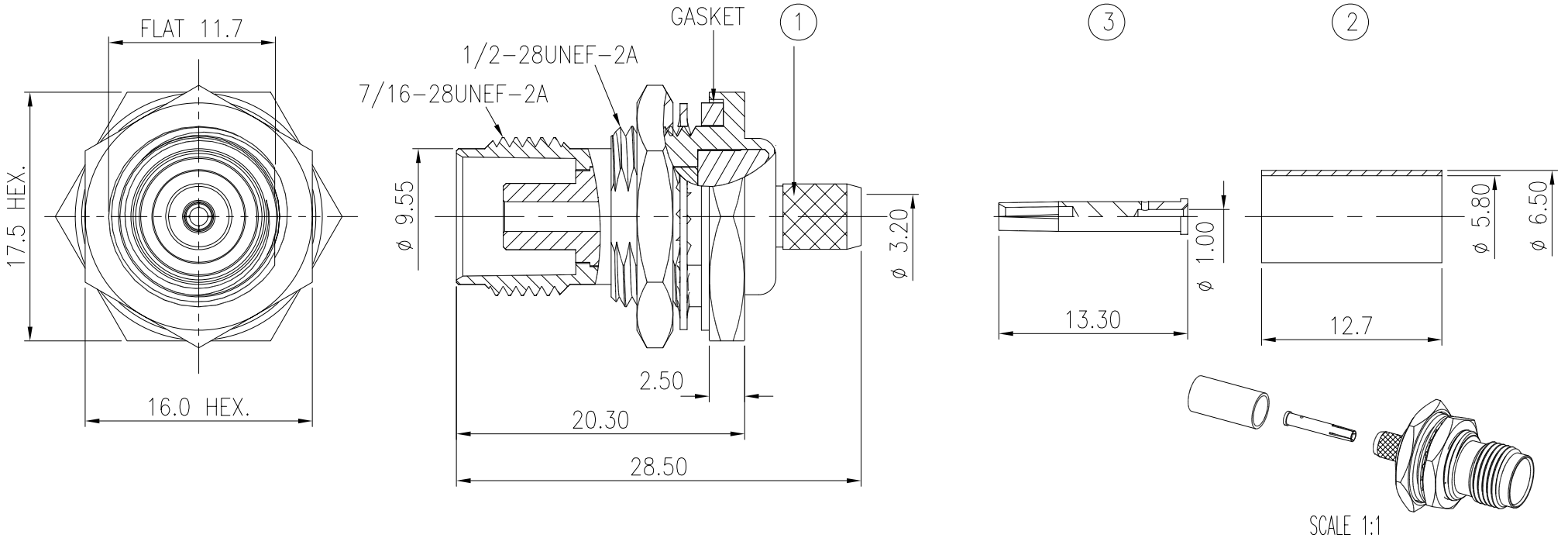

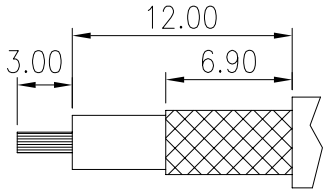

CABLE STRIPPING DIM.

NO.	QT'Y	DESCRIPTION	PART'S NO.	MATERIAL	FINISH
3	1	CONTACT	12-135A1-02GD	B PHOSPHORUS BRONZE	GOLD PLATED
2	1	FERRULE	20-109C0-05NA	BRASS	NICKEL PLATED
1	1	NUT	S12-135A1	BRASS	NICKEL PLATED
	1	WASHER		STEEL	NICKEL PLATED
	1	GESKET		SILICON RUBBER	NONE
	1	BODY		BRASS	NICKEL PLATED
	1	INSULATOR		TEFLON	NONE
	1	BODY		BRASS	NICKEL PLATED

LTR	REVISION RECORD	ECN	DR/CHK	DATE
B	MATERIAL CHANGE	960907	YV.	9-10-07'

DO NOT SCALE DRAWING

GENERAL TOLERANCES
DIM: .X±0.25(0.01) .XX±0.12(0.005)
ANGULAR: ±3°

DIMENSION CLASSIFICATION
■: CRITICAL ⊠: MAJOR

REVISE ONLY ON CAD SYSTEM

MATERIAL : SEE TABLE
FINISH : SEE TABLE
DRAWN BY: YVONNE 9/21/2005
CHK'D BY:
APP'D BY :
SCALE : 2.5 : 1
SHEET 1 OF 1
UNIT : mm

圓陵工業股份有限公司
ALINER INDUSTRIES, INC.

TITLE: TNC ST. JACK BULKHEAD CRIMP FOR RG-223 CABLE

DWG. NO.: 12-135A1-B
REV B