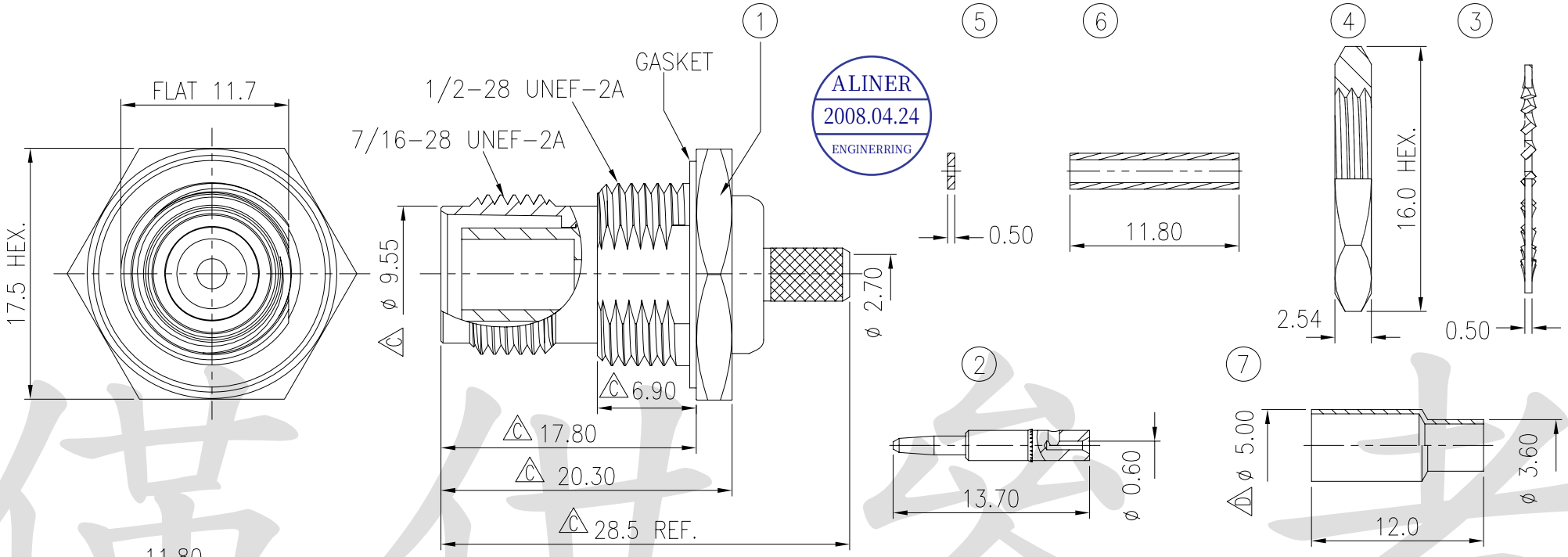

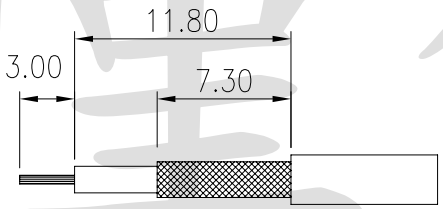

CABLE STRIPPING DIM.

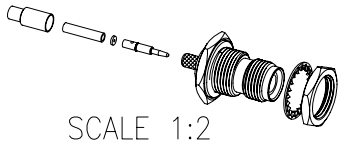

SCALE 1:2

NO.	QT'Y	DESCRIPTION	PART'S NO.	MATERIAL	FINISH
7	1	FERRULE	12-130A0-04NA	BRASS	NICKEL PLATED
6	1	FERRULE	12-135A0-05NA	BRASS	NICKEL PLATED
5	1	INSULATOR	12-130B0-0300	TEFLON	NONE
4	1	NUT	12-135A0-07NA	BRASS	NICKEL PLATED
3	1	WASHER	17-501A0-07NA	STEEL	NICKEL PLATED
2	1	CONTACT	12-135AR-02GD	BRASS	GOLD PLATED
1	1	GASKET	C S12-135AR	SILICON RUBBER	NONE
	1	BODY		BRASS	NICKEL PLATED
	1	INSULATOR		TEFLON	NONE
	1	BODY		BRASS	NICKEL PLATED

LTR	REVISION RECORD	ECN	DR/CHK	DATE
E	TITLE CHANGE	970410	YV.	4-23-08'
D	DIM. CHANGE	970113	YV.	1-24-08'
C	ALL P/N CHANGE	970108	YV.	1-14-08'
B	DIM. CHANGE	941111	YV.	11-25-05'

DO NOT SCALE DRAWING

GENERAL TOLERANCES
DIM: .X±0.25(0.01) .XX±0.12(0.005)
ANGULAR: ±3°

DIMENSION CLASSIFICATION
■: CRITICAL ⊠: MAJOR

REVISE ONLY ON CAD SYSTEM

MATERIAL : SEE TABLE
FINISH : SEE TABLE
DRAWN BY: YVONNE 1/14/2008
CHK'D BY:
APP'D BY :
SCALE : 2.5 : 1
SHEET 1 OF 1
UNIT : mm

圓陵工業股份有限公司
ALINER INDUSTRIES, INC.

TITLE: E RP TNC ST. JACK BULKHEAD CRIMP FOR RG-174/RG-316 CABLE

DWG. NO.: 12-135AR-B
REV E

僅供參考