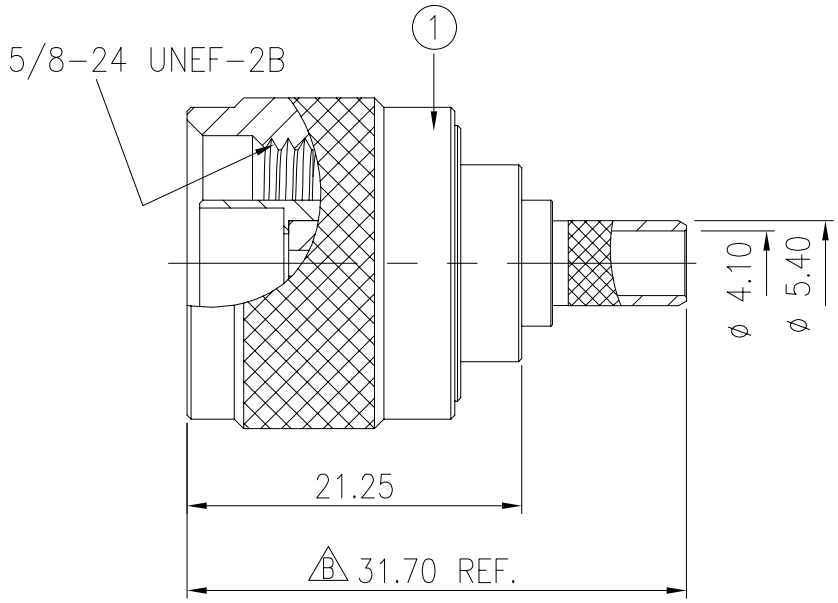

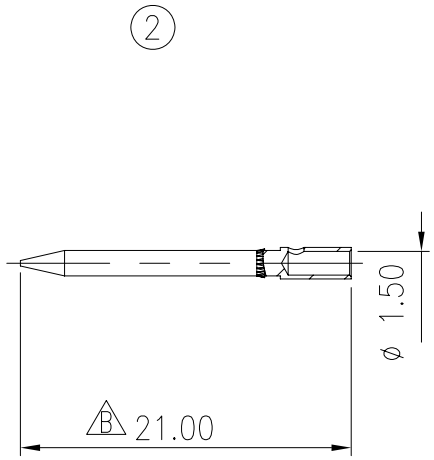

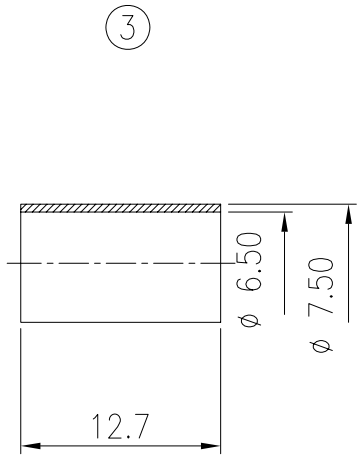

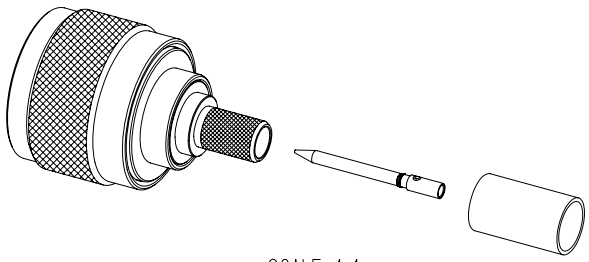

SCALE 1:1

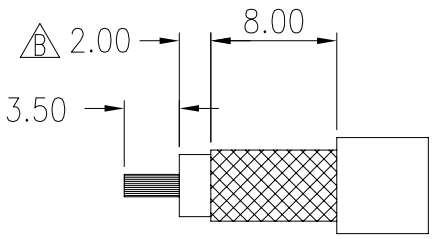

CABLE STRIPPING DIM.

NO.	QT'Y	DESCRIPTION	PART'S NO.	MATERIAL	FINISH
3	1	FERRULE	17-132A0-04NA	BRASS	NICKEL PLATED
2	1	CONTACT	B 18-130BA-02GD	BRASS	GOLD PLATED
1	1	INSULATOR	S18-130BA	TEFLON	NONE
	1	BODY		BRASS	NICKEL PLATED
	1	RETAINING RING		PHOSPHORUS BRONZE	NONE
	1	GASKET		SILICON RUBBER	NONE
	1	HOLDER		BRASS	NICKEL PLATED
	1	SHELL		BRASS	NICKEL PLATED

LTR	REVISION RECORD	ECN	DR/CHK	DATE
B	DIM. CHANGE	970201	YV.	2-01-08'

DO NOT SCALE DRAWING

GENERAL TOLERANCES
DIM: .X±0.25(0.01) .XX±0.12(0.005)
ANGULAR: ±3°

DIMENSION CLASSIFICATION
■: CRITICAL ⊠: MAJOR

REVISE ONLY ON CAD SYSTEM

MATERIAL : SEE TABLE
FINISH : SEE TABLE
DRAWN BY: YVONNE 1/09/2008
CHK'D BY: YVONNE 2/01/2008
APP'D BY :
SCALE : 2 : 1
SHEET 1 OF 1
UNIT : mm

圓陵工業股份有限公司
ALINER INDUSTRIES, INC.

TITLE: TYPE N ST. PLUG CRIMP FOR LMR-240 CABLE

DWG. NO.: 18-130BA-B
REV B