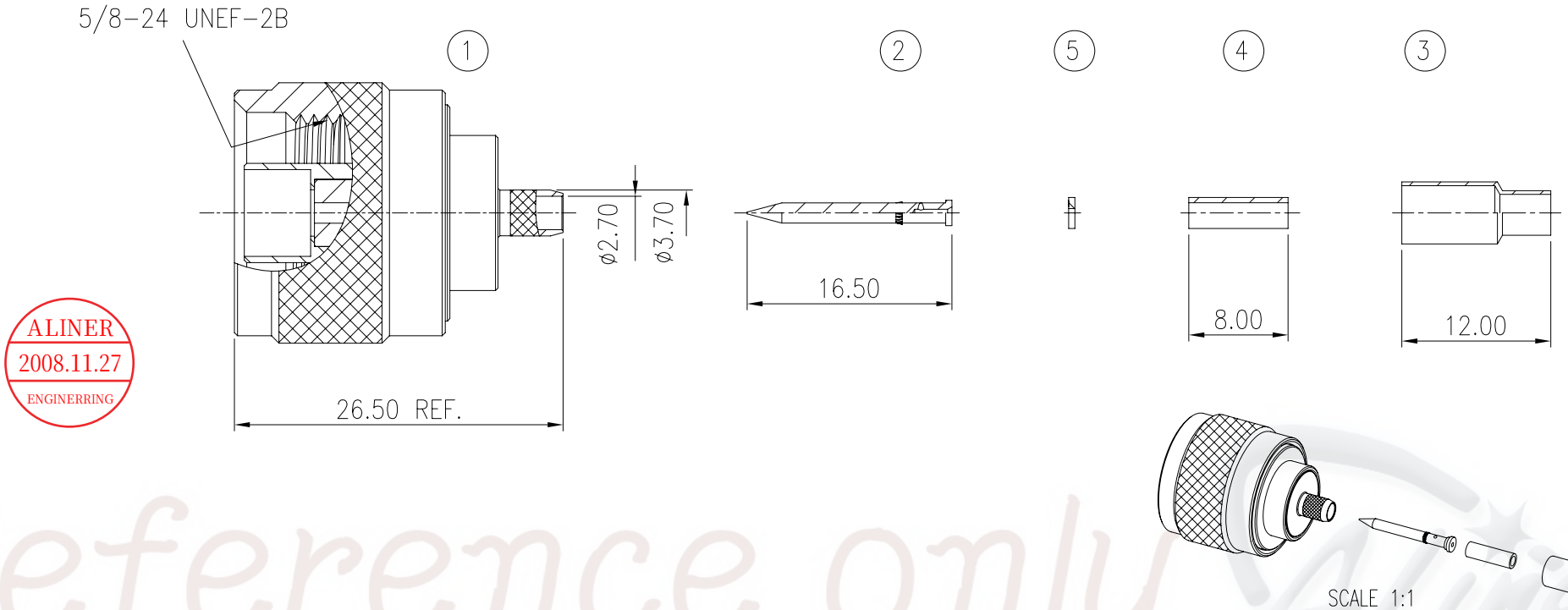


ALINER
2008.11.27
ENGINERRING

Reference only Aliner

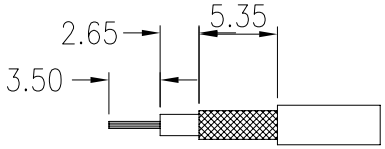


CABLE STRIPPING DIM.

| NO. | QT'Y | DESCRIPTION | PART'S NO. | MATERIAL | FINISH |
|---|---|---|---|---|---|
| 5 | 1 | INSULATOR | 12-130B0-0300 | TEFLON | NONE |
| 4 | 1 | FERRULE | 12-130AR-02NA | BRASS | NICKEL PLATED |
| 3 | 1 | FERRULE | 12-130A0-04NA | BRASS | NICKEL PLATED |
| 2 | 1 | CONTACT | 18-131BC-02GD | BRASS | GOLD PLATED |
| 1 | 1 | HOLDER | S18-131BC | BRASS | GOLD PLATED |
| | 1 | RETAINING RING | | PHOSPHORUS BRONZE | NONE |
| | 1 | GASKET | | SILICON RUBBER | NONE |
| | 1 | COUPLING NUT | | BRASS | NICKEL PLATED |
| | 1 | INSULATOR | | TEFLON | NONE |
| | 1 | BODY | | BRASS | NICKEL PLATED |

DO NOT SCALE DRAWING

| LTR | REVISION RECORD | ECN | DR/CHK | DATE |
|---|---|---|---|---|

GENERAL TOLERANCES
DIM: .X±0.25(0.01) .XX±0.12(0.005)
ANGULAR: ±3°

DIMENSION CLASSIFICATION
■: CRITICAL ⊠: MAJOR

REVISE ONLY ON CAD SYSTEM

MATERIAL : SEE TABLE
FINISH : SEE TABLE
DRAWN BY: YVONNE 3/31/2008
CHK'D BY:
APP'D BY :
SCALE : 2 : 1
SHEET 1 OF 1
UNIT : mm

圓陵工業股份有限公司
ALINER INDUSTRIES, INC.

TITLE: TYPE N ST. PLUG FOR RG-174 / RG-316 CABLE

DWG. NO.: 18-131BB-B
REV A