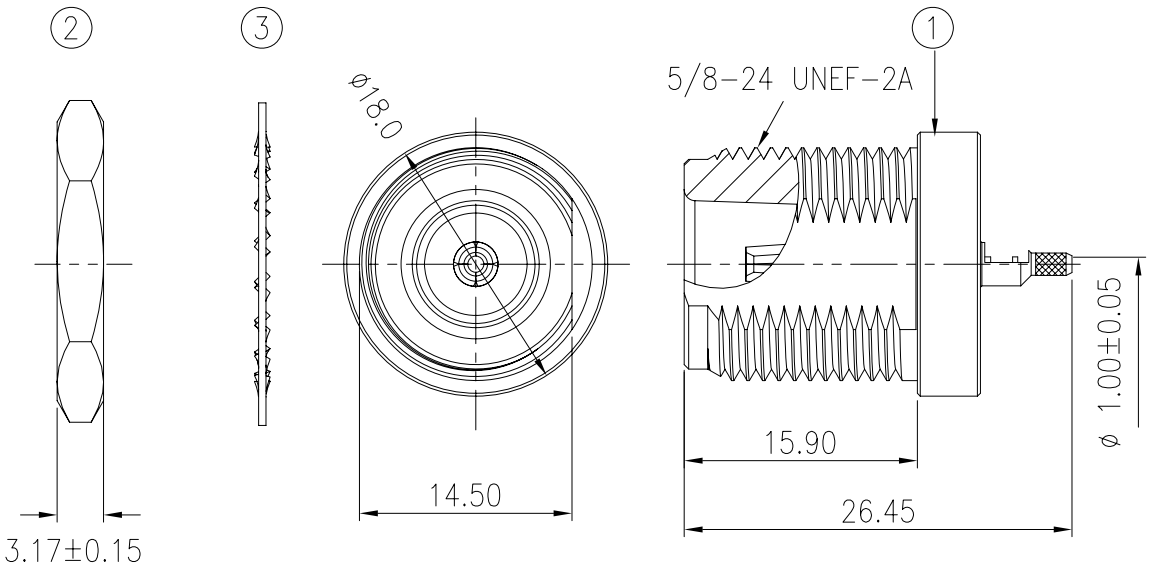

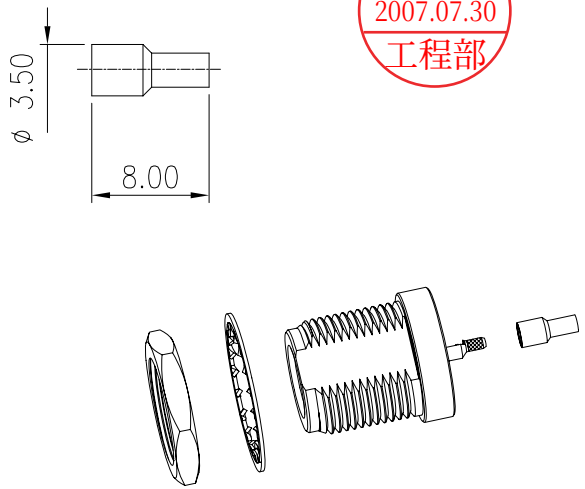

SCALE 1:1

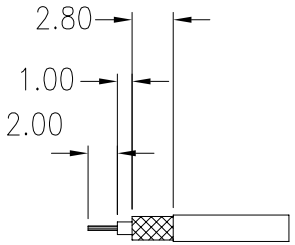

CABLE STRIPPING DIM.

NO.	QT'Y	DESCRIPTION	PART'S NO.	MATERIAL	FINISH
4	1	FERRULE	20-132AR-03NA	BRASS	NICKEL PLATED
3	1	WASHER	18-234GA-01NA	BRASS	NICKEL PLATED
2	1	NUT	18-015B0-04NA	BRASS	NICKEL PLATED
1	1	INSULATOR	S18-234B0	TEFLON	NONE
	1	BODY		BRASS	NICKEL PLATED
	1	CONTACT		PHOSPHORUS BRONZE	GOLD PLATED
	1	BODY		BRASS	NICKEL PLATED

Aliner
2007.07.30
工程部

DO NOT SCALE DRAWING

LTR	REVISION RECORD	ECN	DR/CHK	DATE

GENERAL TOLERANCES
DIM: .X±0.25(0.01) .XX±0.12(0.005)
ANGULAR: ±3°

DIMENSION CLASSIFICATION
■: CRITICAL ⊠: MAJOR

REVISE ONLY ON CAD SYSTEM

MATERIAL : SEE TABLE
FINISH : SEE TABLE
DRAWN BY: YVONNE 4/02/2003
CHK'D BY: YVONNE 7/26/2007
APP'D BY :
SCALE : 2 : 1
SHEET 1 OF 1
UNIT : mm

圓陵工業股份有限公司
ALINER INDUSTRIES, INC.

TITLE: TYPE N BULKHEAD JACK CRIMP FOR RG-178 CABLE

DWG. NO.: 18-234B0-B
REV A

18-234B