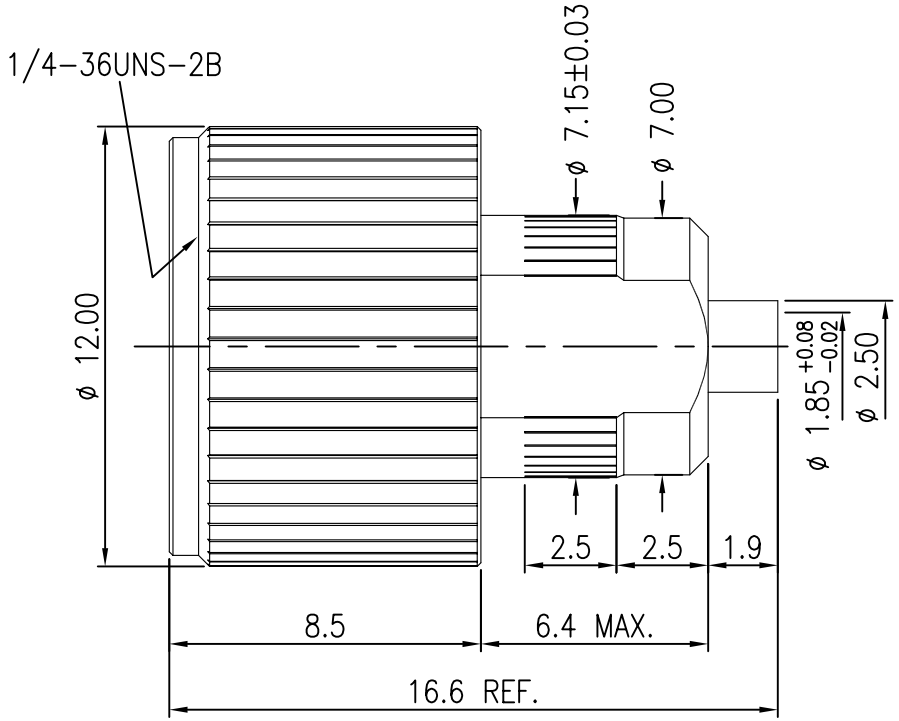

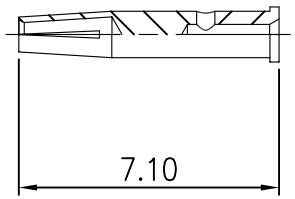

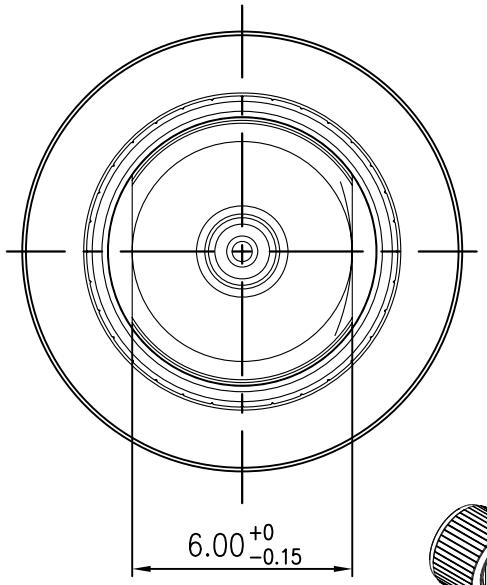

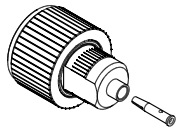

SCALE 1:1

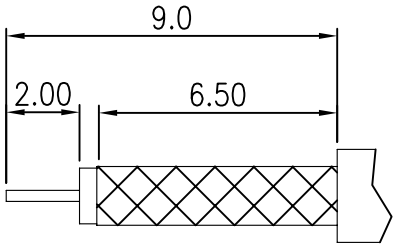

STRIPPING DIM.

NO.	QT'Y	DESCRIPTION	PART'S NO.	MATERIAL	FINISH
3	1	TRAY	01272218	PET	NONE
2	1	CONTACT	20-002RV-2G	PHOSPHORUS BRONZE	GOLD PLATED
1	1	BODY	S20-009AR	BRASS	NICKEL PLATED
	1	INSULATOR		TEFLON	NONE
	1	RING		BRASS	NICKEL PLATED
	1	GASKET		SILICON RUBBER	NONE
	1	SHELL		BRASS	BLACK CHROME

DO NOT SCALE DRAWING

LTR	REVISION RECORD	ECN	DR/CHK	DATE

GENERAL TOLERANCES
DIM: .X±0.25(0.01) .XX±0.12(0.005)
ANGULAR: ±3°

DIMENSION CLASSIFICATION
■: CRITICAL ⊠: MAJOR

REVISE ONLY ON CAD SYSTEM

MATERIAL : SEE TABLE
FINISH : SEE TABLE
DRAWN BY: YVONNE 9/07/2005
CHK'D BY:
APP'D BY :
SCALE : 5 : 1
SHEET 1 OF 1
UNIT : mm

圓陵工業股份有限公司
ALINER INDUSTRIES, INC.

TITLE: RP SMA ST. PLUG FOR RG-179 CABLE

DWG. NO.: 20-009AR-T

REV A