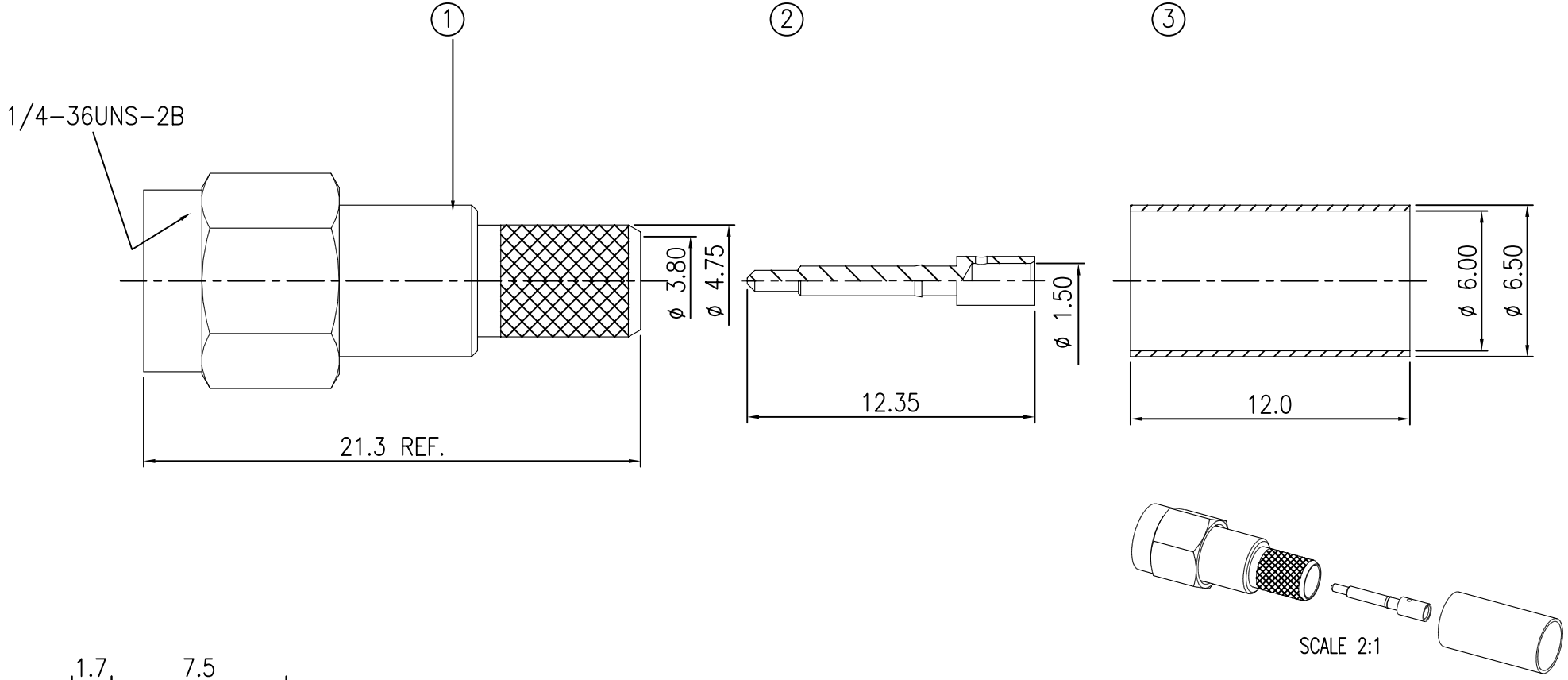

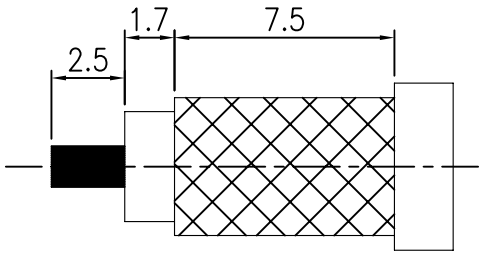

CABLE STRIPPING DIM.

NO.	QT'Y	DESCRIPTION	PART'S NO.	MATERIAL	FINISH
3	1	FERRULE	20-101T0-02GA	BRASS	GOLD PLATED
2	1	CONTACT	20-101BH-02GD	BERYLLIUM COPPER	GOLD PLATED
1	1	SHELL	S20-101T0	BRASS	GOLD PLATED
	1	GASKET		SILICON RUBBER	NONE
	1	RETAINING RING		STAINLESS STEEL	CLEANED
	1	INSULATOR		TEFLON	NONE
	1	BODY		BRASS	GOLD PLATED

DO NOT SCALE DRAWING

LTR	REVISION RECORD	ECN	DR/CHK	DATE

GENERAL TOLERANCES
DIM: .X±0.25(0.01) .XX±0.12(0.005)
ANGULAR: ±3°

DIMENSION CLASSIFICATION
■: CRITICAL ⊠: MAJOR

REVISE ONLY ON CAD SYSTEM

MATERIAL : SEE TABLE
FINISH : SEE TABLE
DRAWN BY: YVONNE 2/22/2005
CHK'D BY:
APP'D BY :
SCALE : 4 : 1
SHEET 1 OF 1
UNIT : mm

圓陵工業股份有限公司
ALINER INDUSTRIES, INC.

TITLE: SMA ST. PLUG FOR TZC 500 25 CABLE

DWG. NO.: 20-101T0-B

REV A