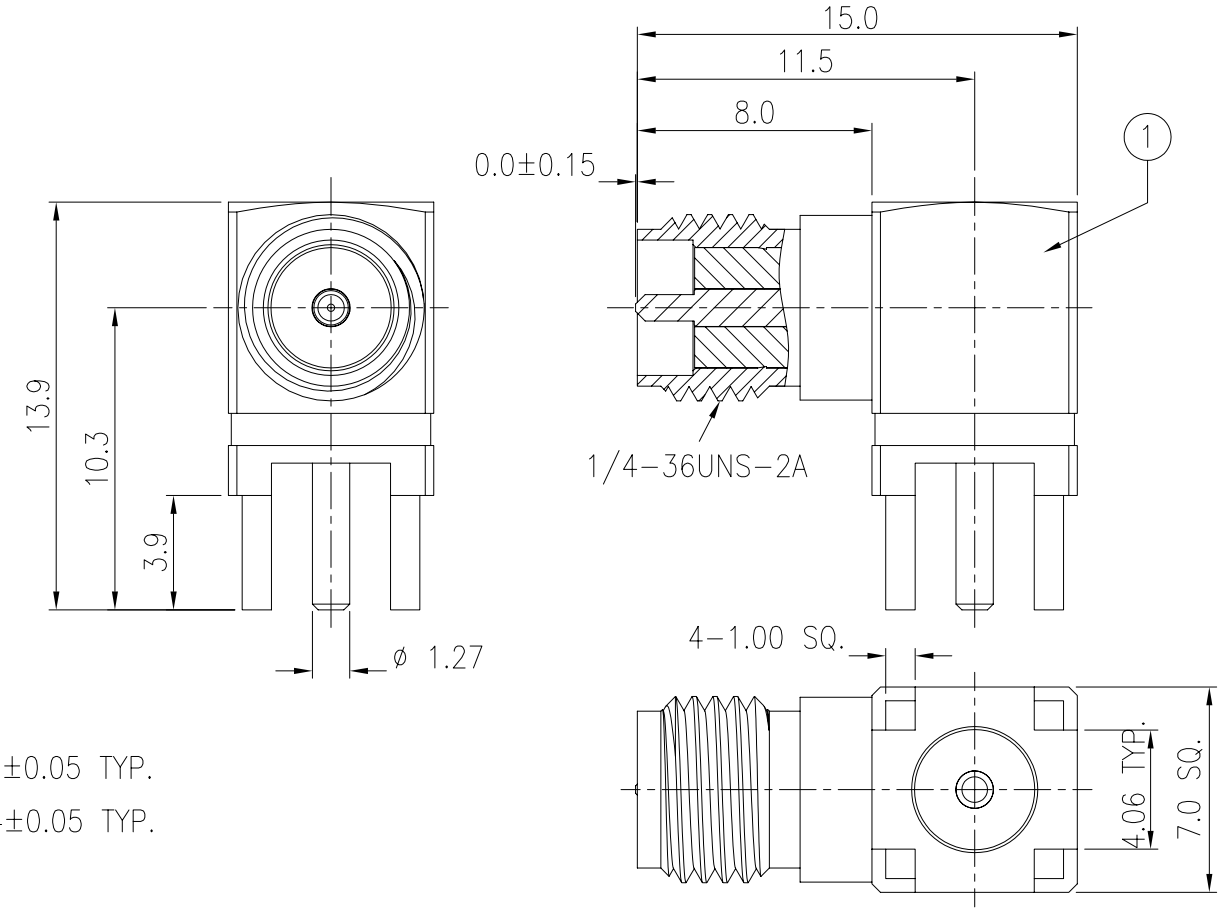

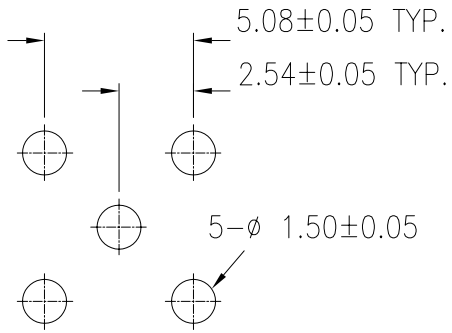

RECOMMEND P.C.B. MOUNT

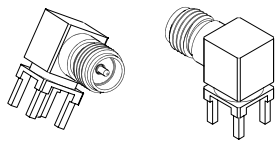

SCALE 1:1

NO.	QT'Y	DESCRIPTION	PART'S NO.	MATERIAL	FINISH
1	1/50	TRAY	S20-109GK	PET	NONE
	1	INSULATOR		TEFLON	NONE
	1	BODY		BRASS	GOLD PLATED
	1	CONTACT		BRASS	GOLD PLATED
	1	INSULATOR		TEFLON	NONE
	1	BODY		BRASS	GOLD PLATED

GENERAL TOLERANCES
DIM: .X±0.25(0.01) .XX±0.12(0.005)
ANGULAR: ±3°

DIMENSION CLASSIFICATION
■: CRITICAL ⊠: MAJOR

MATERIAL : SEE TABLE
FINISH : SEE TABLE
DRAWN BY: MARY 10/05/2005
CHK'D BY:
APP'D BY :
SCALE : 4 : 1
SHEET 1 OF 1
UNIT : mm

圓陵工業股份有限公司
ALINER INDUSTRIES, INC.

TITLE: RP SMA R/A JACK FOR P.C.B. RECEPTACLE

DWG. NO.: 20-109GK-T
REV A

LTR	REVISION RECORD	ECN	DR/CHK	DATE

REVISE ONLY ON CAD SYSTEM

DO NOT SCALE DRAWING

20-109GAR