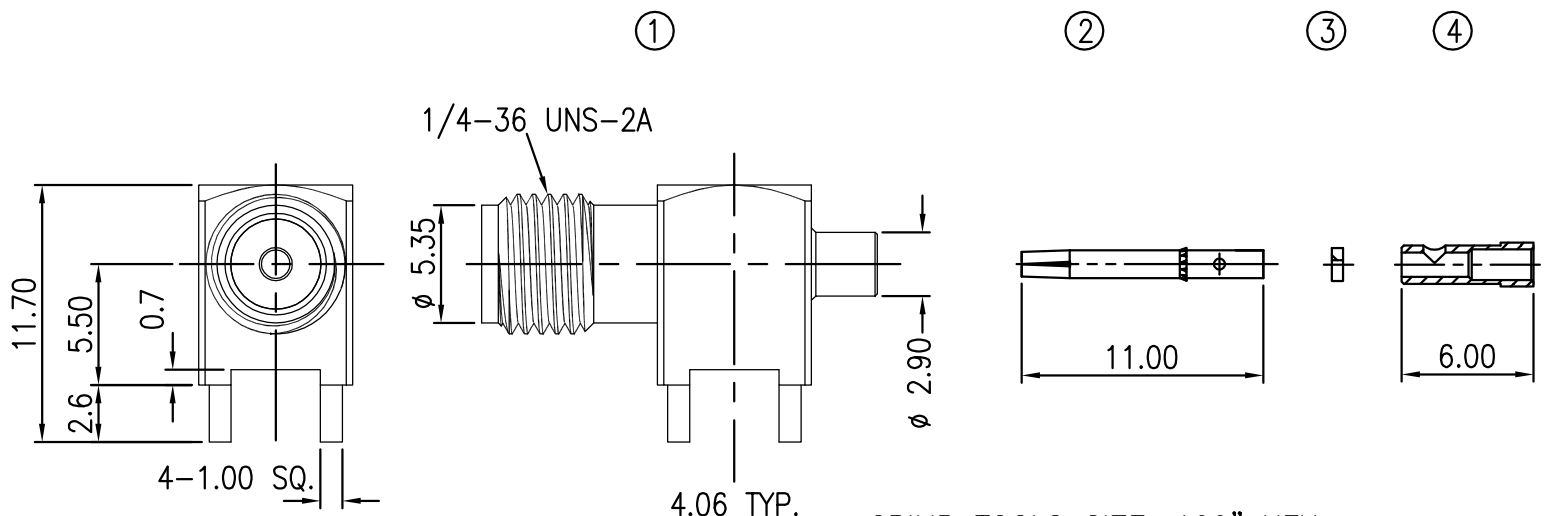

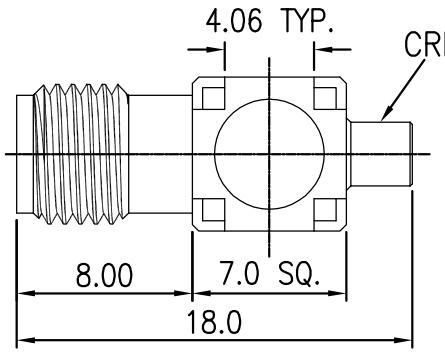

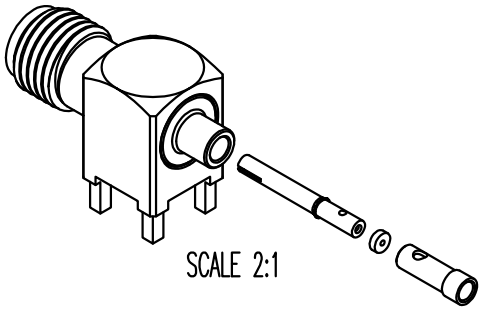

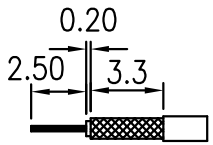

CABLE STRIPPING DIM.

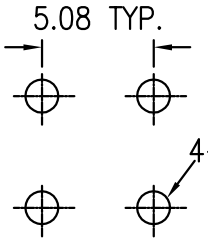

RECOMMEND P.C.B. MOUNT

NO.	QT'Y	DESCRIPTION	PART'S NO.	MATERIAL	FINISH
4	1	FERRULE	20-114AR-05GA	BRASS	GOLD PLATED
3	1	INSULATOR	20-114AR-0400	TEFLON	NONE
2	1	CONTACT	20-114AS-03GD	BERYLLIUM COPPER	GOLD PLATED
1	1	INSULATOR	S20-114AR	TEFLON	NONE
	1	BODY		BRASS	GOLD PLATED
	1	BODY		BRASS	GOLD PLATED

DO NOT SCALE DRAWING

LTR	REVISION RECORD	ECN	DR/CHK	DATE

GENERAL TOLERANCES
DIM: .X±0.25(0.01) .XX±0.12(0.005)
ANGULAR: ±3°

DIMENSION CLASSIFICATION
■: CRITICAL ⊠: MAJOR

REVISE ONLY ON CAD SYSTEM

MATERIAL : SEE TABLE
FINISH : SEE TABLE
DRAWN BY: JAY 4/18/2007
CHK'D BY:
APP'D BY :
SCALE : 3 : 1
SHEET 1 OF 1
UNIT : mm

圓陵工業股份有限公司
ALINER INDUSTRIES, INC.

TITLE: SMA R/A JACK FOR ø 1.37 AND P.C.B. MOUNT

DWG. NO.: 20-114AS-B
REV A