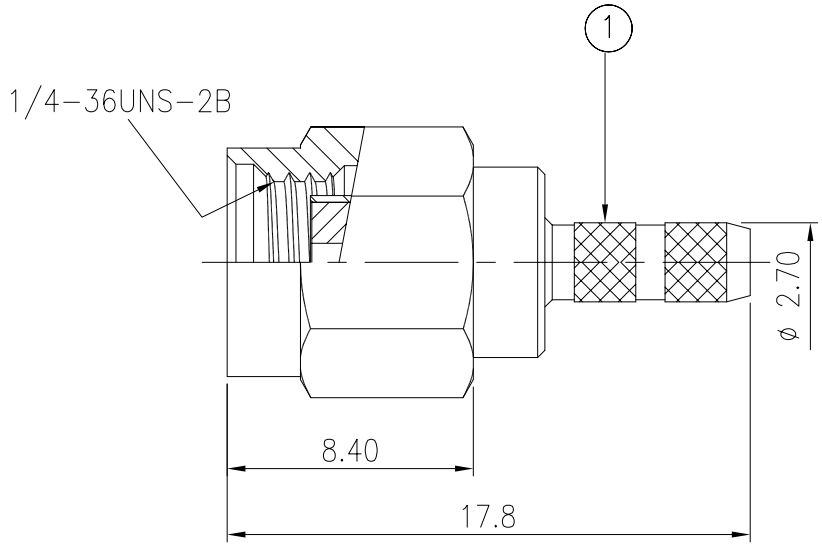

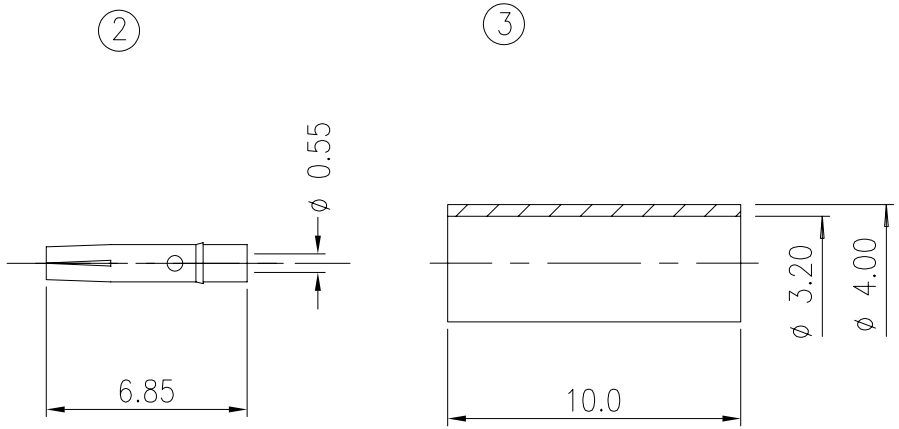

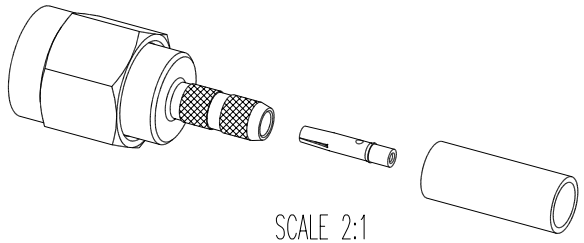

SCALE 2:1

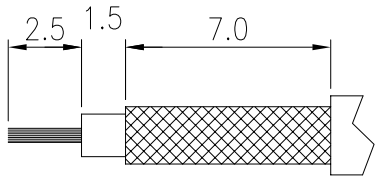

CABLE STRIPPED DIM.

	NO.	QT'Y	DESCRIPTION	PART'S NO.	MATERIAL	FINISH
B	3	1	FERRULE	20-101B0-05GA	BRASS	GOLD PLATED
B	2	1	CONTACT	20-301A0-02GD	BERYLLIUM COPPER	GOLD PLATED
	1	1	GASKET	S20-101A0	SILICON RUBBER	NONE
		1	RETAINING RING		SUS-304	CLEANING
		1	INSULATOR		TEFLON	NONE
		1	SHELL		BRASS	GOLD PLATED
		1	BODY		BRASS	GOLD PLATED

LTR	REVISION RECORD	ECN	DR/CHK	DATE
B	PART'S NO. CHANGE	950105	JAY	1-20-06'

DO NOT SCALE DRAWING

GENERAL TOLERANCES
DIM: .X±0.25(0.01) .XX±0.12(0.005)
ANGULAR: ±3°

DIMENSION CLASSIFICATION
■: CRITICAL ⊠: MAJOR

REVISE ONLY ON CAD SYSTEM

MATERIAL : SEE TABLE
FINISH : SEE TABLE
DRAWN BY: JAY 01/20/2006
CHK'D BY:
APP'D BY :
SCALE : 4 : 1
SHEET 1 OF 1
UNIT : mm

圓陵工業股份有限公司
ALINER INDUSTRIES, INC.

TITLE: RP SMA ST. PLUG FOR RG-174/RG-316 CABLE

DWG. NO.: 20-301A0-B
REV B

20-301A