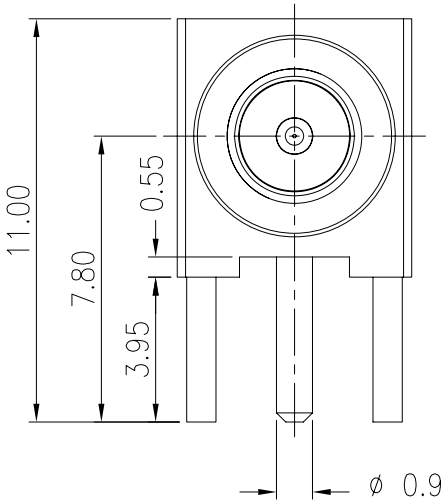

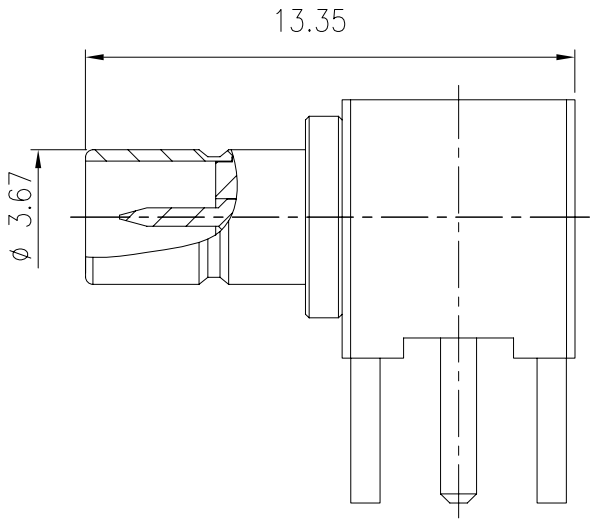

Aliner
2007.09.28
工程部

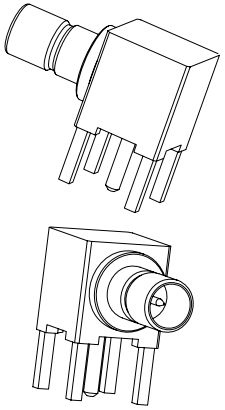

SCALE 2:1

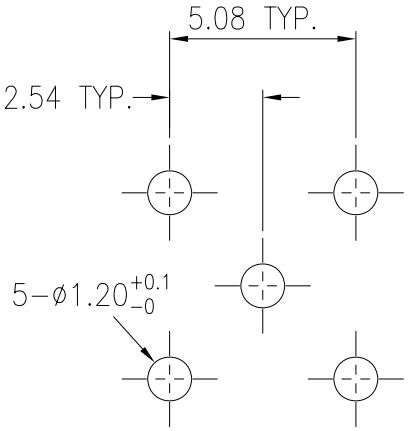

RECOMMENDED P.C.B. LAYOUT

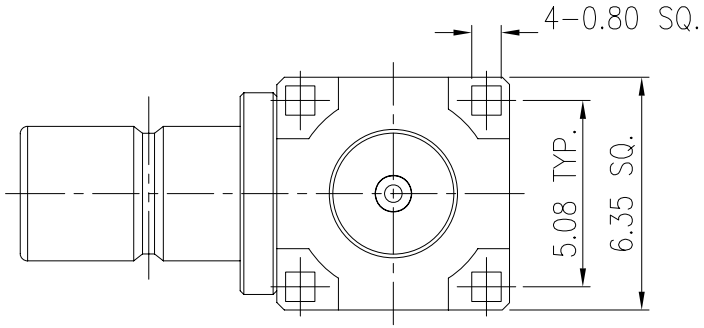

DESCRIPTION	PART'S NO.	MATERIAL	FINISH
INSULATOR	S21-209AC	TEFLON	NONE
BODY		BRASS	☒ GOLD PLATED 10u"
INSULATOR		TEFLON	NONE
CONTACT		BRASS	☒ GOLD PLATED 15u"
BODY		BRASS	☒ GOLD PLATED 10u"

LTR	REVISION RECORD	ECN	DR/CHK	DATE

DO NOT SCALE DRAWING

GENERAL TOLERANCES
DIM: .X±0.25(0.01) .XX±0.12(0.005)
ANGULAR: ±3°

DIMENSION CLASSIFICATION
■: CRITICAL ☒: MAJOR

REVISE ONLY ON CAD SYSTEM

MATERIAL : SEE TABLE
FINISH : SEE TABLE
DRAWN BY: YVONNE 9/27/2007
CHK'D BY:
APP'D BY :
SCALE : 5 : 1
SHEET 1 OF 1
UNIT : mm

圓陵工業股份有限公司
ALINER INDUSTRIES, INC.

TITLE: 75 OHM SMB R/A JACK FOR P.C.B MOUNT

DWG. NO.: 21-209AC-B
REV A