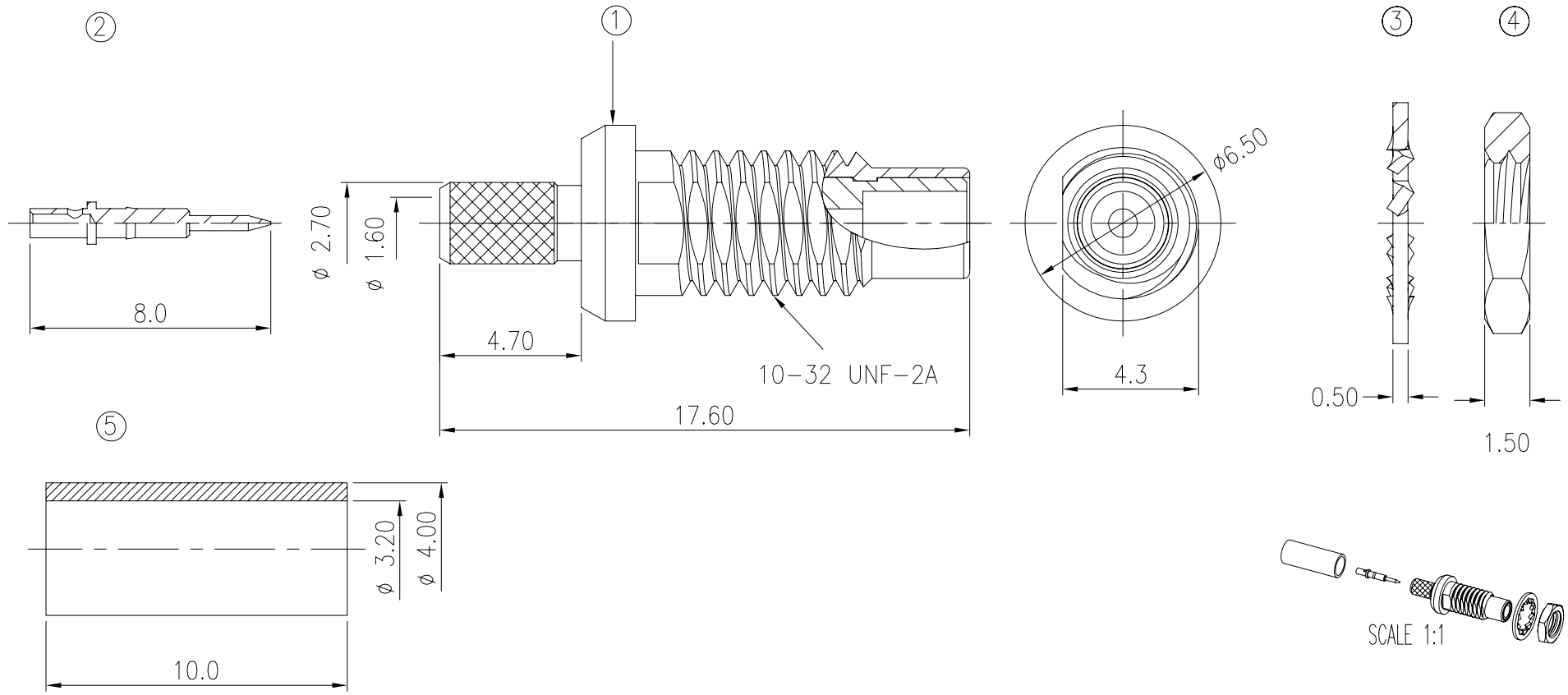

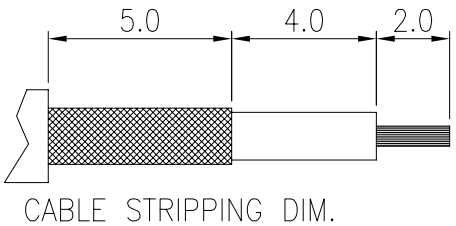

CABLE STRIPPING DIM.

NO.	QT'Y	DESCRIPTION	PART'S NO.	MATERIAL	FINISH
5	1	FERRULE	20-101B0-05GA	BRASS	GOLD PLATED
4	1	NUT	21-209B0-07GB	BRASS	GOLD PLATED
3	1	WASHER	21-209B0-06GB	BRASS	GOLD PLATED
2	1	CONTACT	21-131A0-02GD	BRASS	GOLD PLATED
1	1	INSULATOR	S21-432B0	TEFLON	NONE
	1	BODY		BRASS	GOLD PLATED
	1	HOLDER		BRASS	GOLD PLATED

LTR	REVISION RECORD	ECN	DR/CHK	DATE

DO NOT SCALE DRAWING

GENERAL TOLERANCES
DIM: .X±0.25(0.01) .XX±0.12(0.005)
ANGULAR: ±3°

DIMENSION CLASSIFICATION
■: CRITICAL ⊠: MAJOR

REVISE ONLY ON CAD SYSTEM

MATERIAL : SEE TABLE
FINISH : SEE TABLE
DRAWN BY: YVONNE 4/30/2004
CHK'D BY: YVONNE 8/25/2006
APP'D BY :
SCALE : 5 : 1
SHEET 1 OF 1
UNIT : mm

圓陵工業股份有限公司
ALINER INDUSTRIES, INC.

TITLE: SMC ST. BULKHEAD JACK FOR RG-174/RG-316 CABLE

DWG. NO.: 21-432B0-B
REV A

21-432B